A-Star 32U4 Mini

©2014–2018 Pololu Corporation
www.pololu.com

Schematic diagram

Primary microcontroller connections

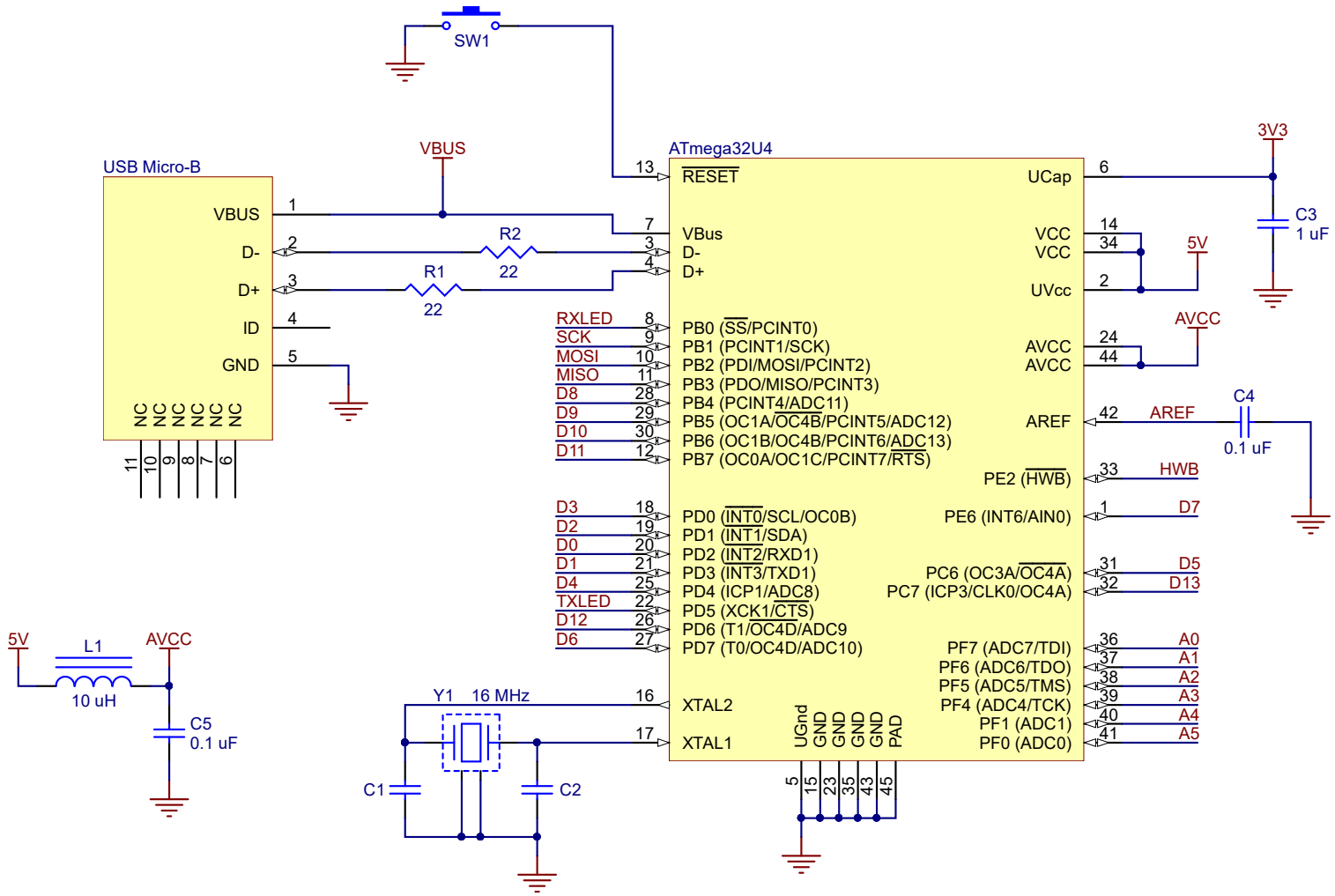

A-Star 32U4 Mini

©2014–2018 Pololu Corporation

www.pololu.com

Schematic diagram

LEDs and external connections

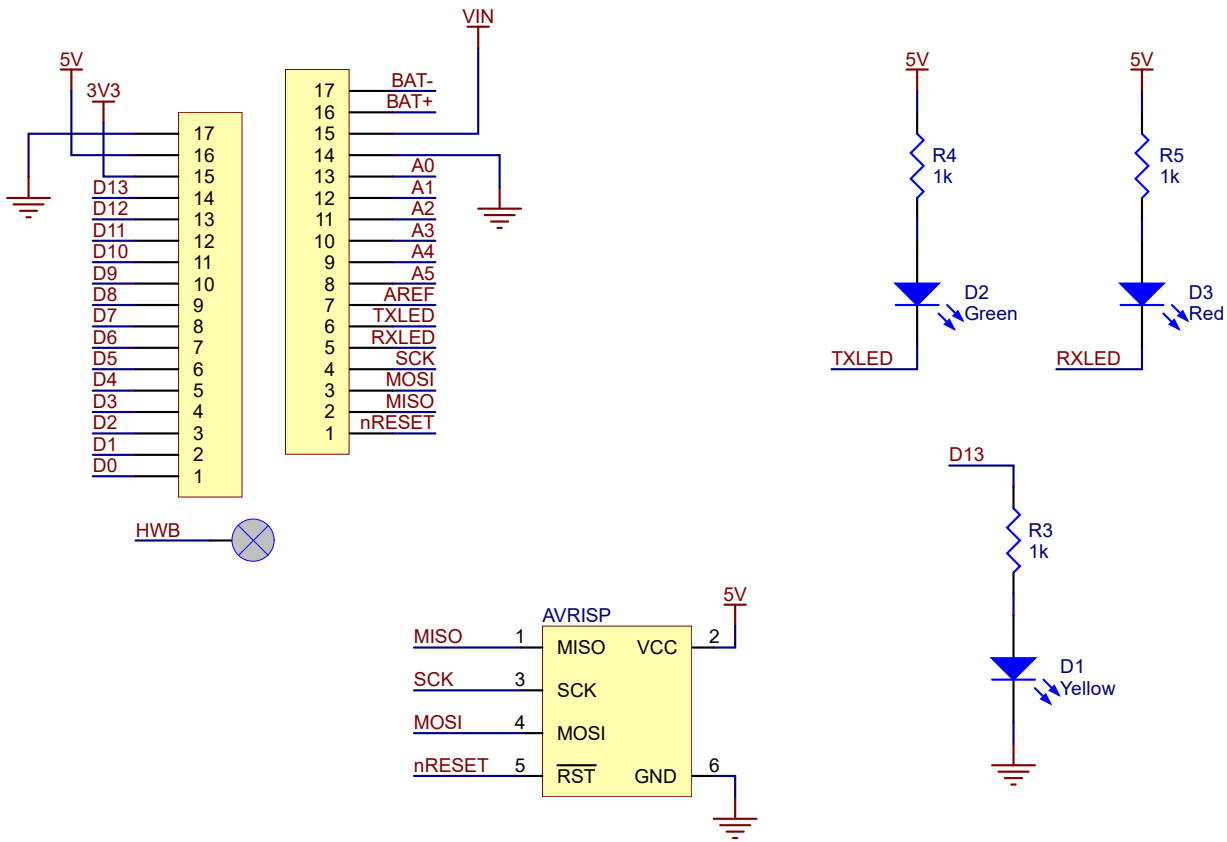

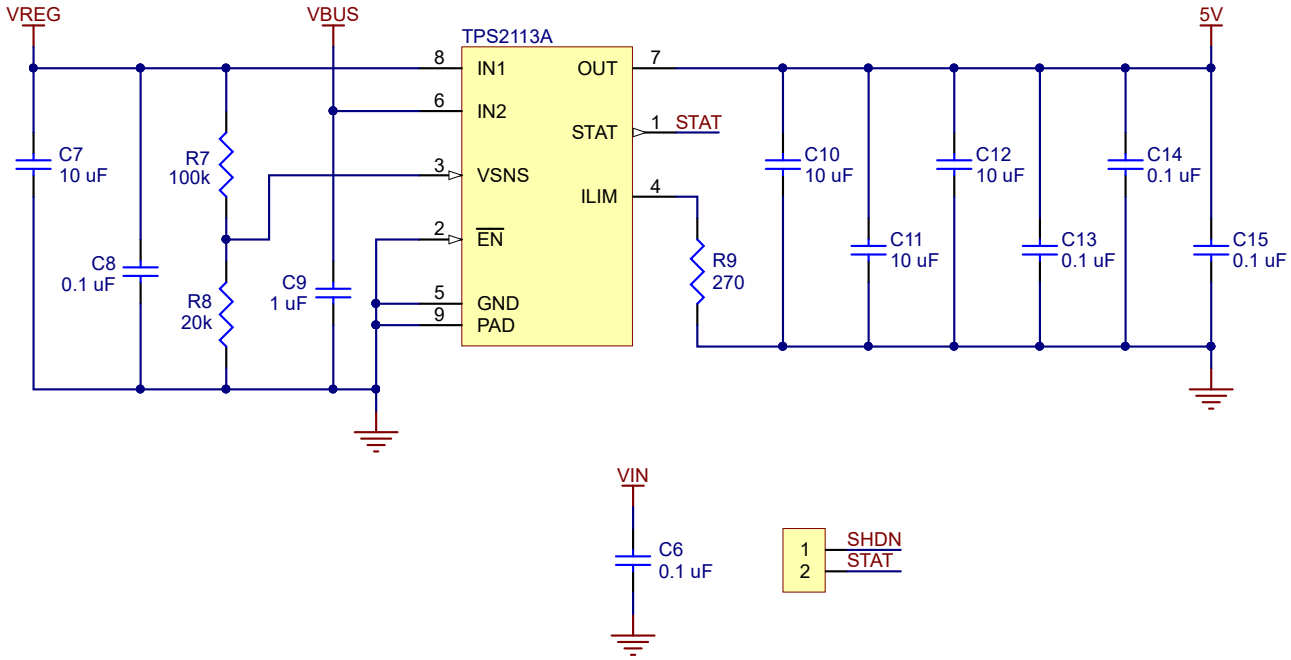
VREG
VBUS
5V
TPS2113A
8
IN1
OUT
7
6
IN2
STAT
1
STAT
3
VSNS
ILIM
4
2
EN
5
9
GND
PAD
C7
10 uF
R7
100k
C8
0.1 uF
R8
20k
C9
1 uF
R9
270
C10
10 uF
C11
10 uF
C12
10 uF
C13
0.1 uF
C14
0.1 uF
C15
0.1 uF
VIN
C6
0.1 uF
1
2
SHDN
STAT

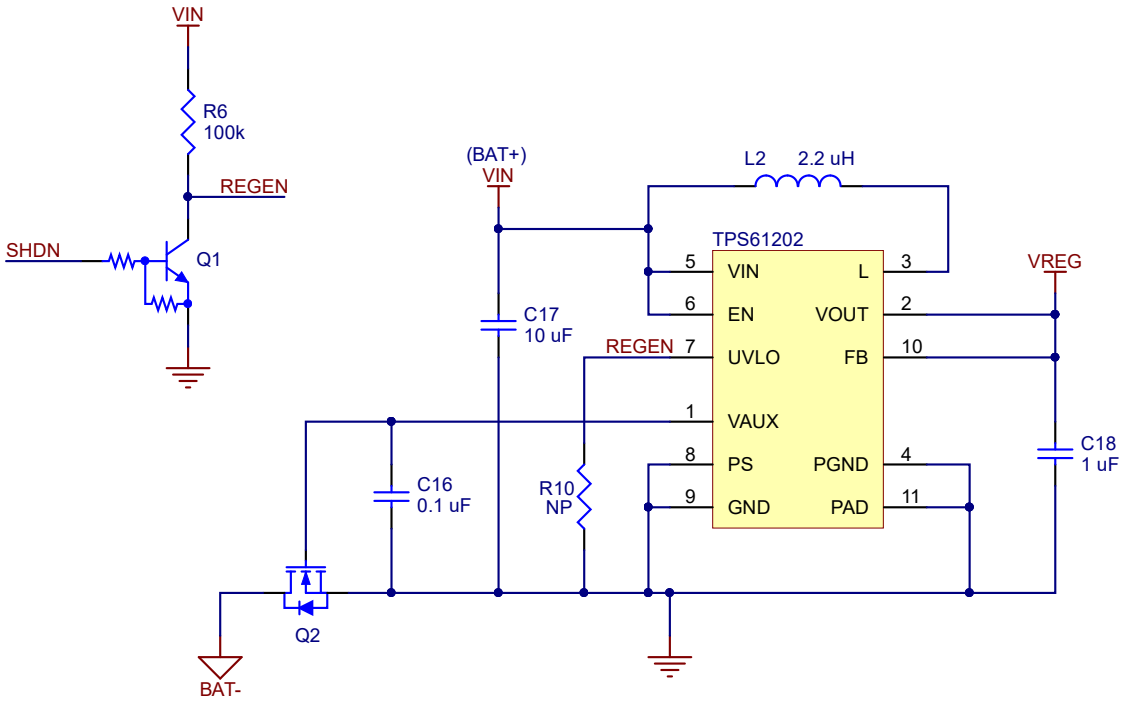
VIN
R6
100k
REGEN
SHDN
Q1
(BAT+)
VIN
L2
2.2 uH
TPS61202
5
VIN
L
3
6
EN
VOUT
2
REGEN
7
UVLO
FB
10
1
VAUX
8
PS
PGND
4
9
GND
PAD
11
C17
10 uF
VREG
C18
1 uF
C16
0.1 uF
R10
NP
Q2
BAT-

©2014–2018 Pololu Corporation

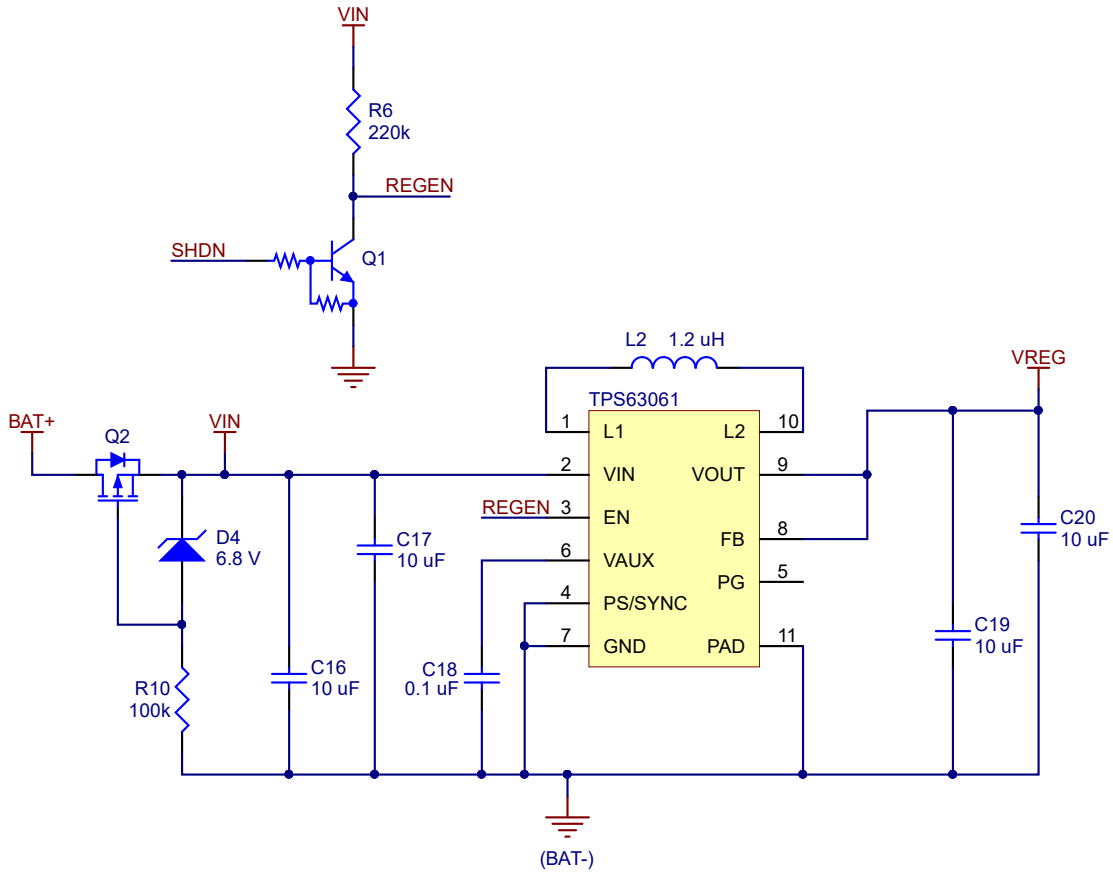

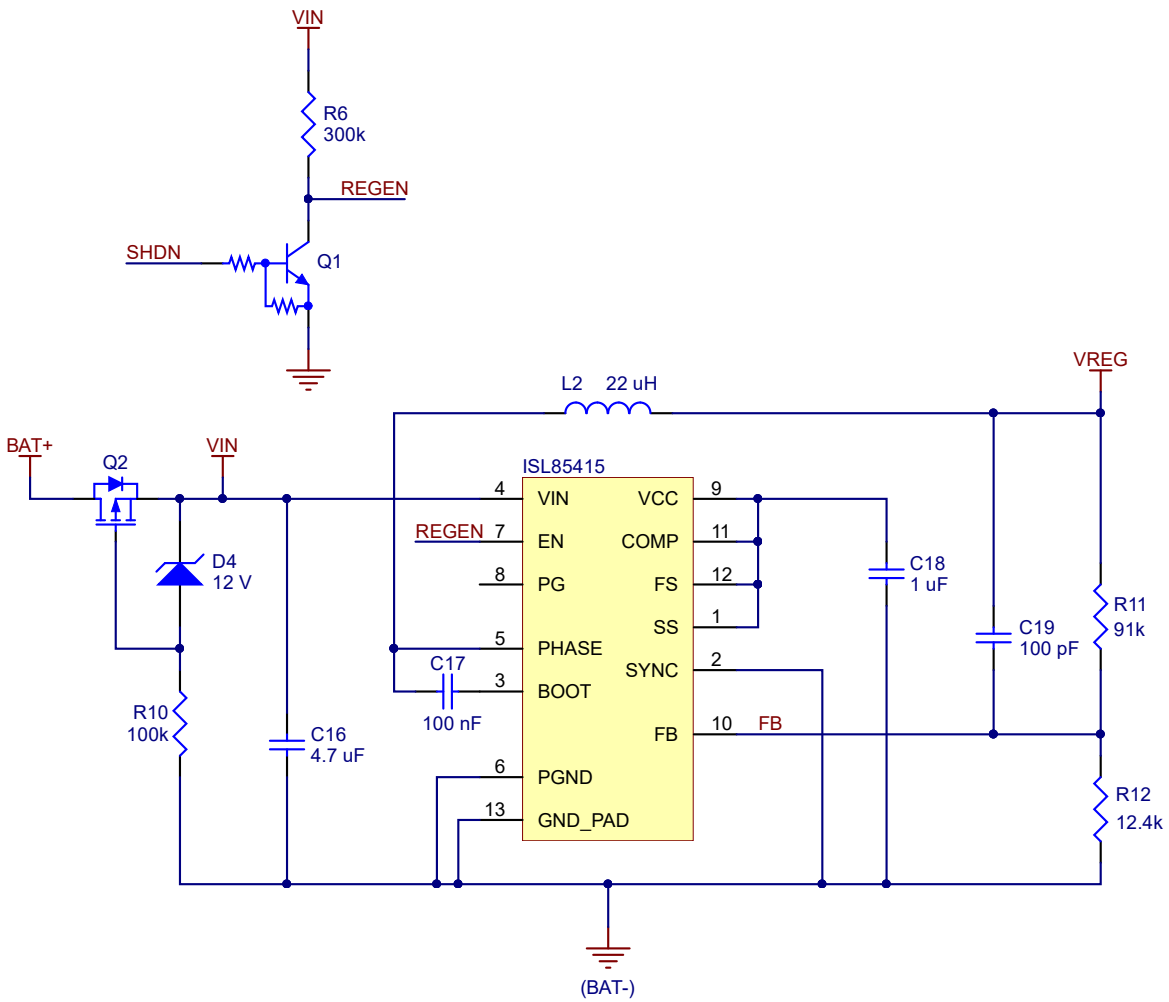
VIN
R6
300k
REGEN
SHDN
Q1
VREG
L2 22 uH
BAT+
Q2
VIN
ISL85415
4 VIN
VCC 9
REGEN 7 EN
COMP 11
8 PG
FS 12
SS 1
5 PHASE
SYNC 2
C17
3 BOOT
100 nF
FB
10 FB
6 PGND
13 GND_PAD
D4
12 V
R10
100k
C16
4.7 uF
C18
1 uF
C19
100 pF
R11
91k
R12
12.4k
(BAT-)
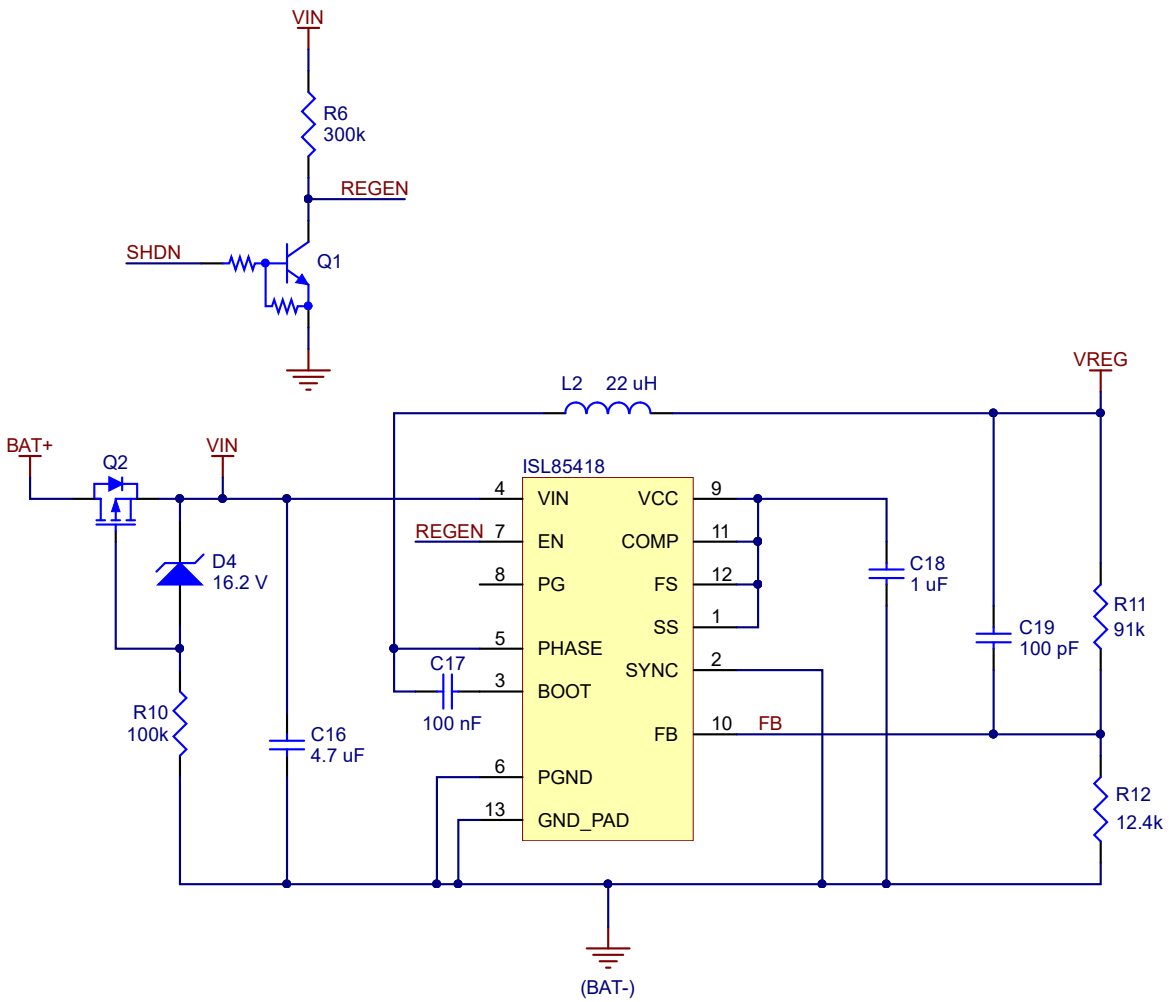
©2014–2018 Pololu Corporation